Item	Date	Remark
A	20230612	Original Drawing

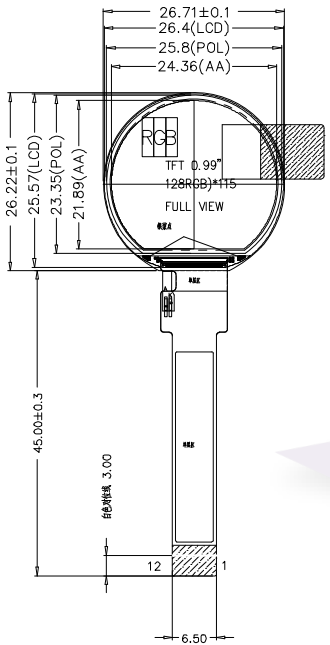

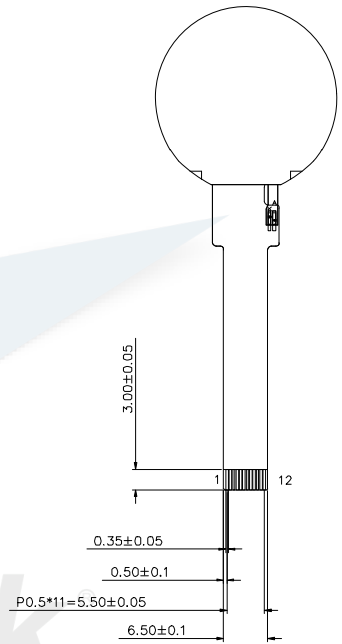

PIN	DESCRIPTION
1	GND
2	LEDK
3	LEDA
4	VDD
5	GND
6	GND
7	D/C
8	CS
9	SCL
10	SDA
11	RESET
12	GND

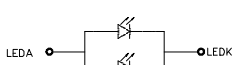

LED CIRCUIT DIAGRAM:

NOTES:

1. DISPLAY TYPE: 0.99" TFT
2. VIEWING DIRECTION: All
3. POLARIZER MODE: TRANSMISSIVE/NORMALLY BLACK
4. DRIVER IC: GC9107
5. OPERATING TEMP.: −20℃~70℃
6. STORAGE TEMP.: −30℃~80℃
7. BACK LIGHT: 2CHIP−WHITE LED; 40MA,3.0V
8. LCM Luminance: 350 CD/M2(TYP)
9. UNMARKED TOLERANCE: ±0.2
10. 建议模组开窗可视区比 LCD A.A区单边大 0.3mm
11. 产品符合ROHS标准

Customer Approval Signature	Shenzhen Osprey Optoelectronics Technology Co., Ltd.							Drawing Number		Rev.
								0.99"TFT		A
	Unless Otherwise Specified		Title	YDP099B002−V2				Material		
	Unit	mm						Soda Lime / Polyimide		
	General Roughness									
	Tolerance			Drawn	E.E.	Panel / E.	P.M.			
	Dimension	±0.3	By	LIJIAN				Scale	Sheet	Size
	Angle	±1	Date	20230612				1:1	1 of 1	A3